# NEGATIVE INPUT HYBRID PRE-AMPLIFIER

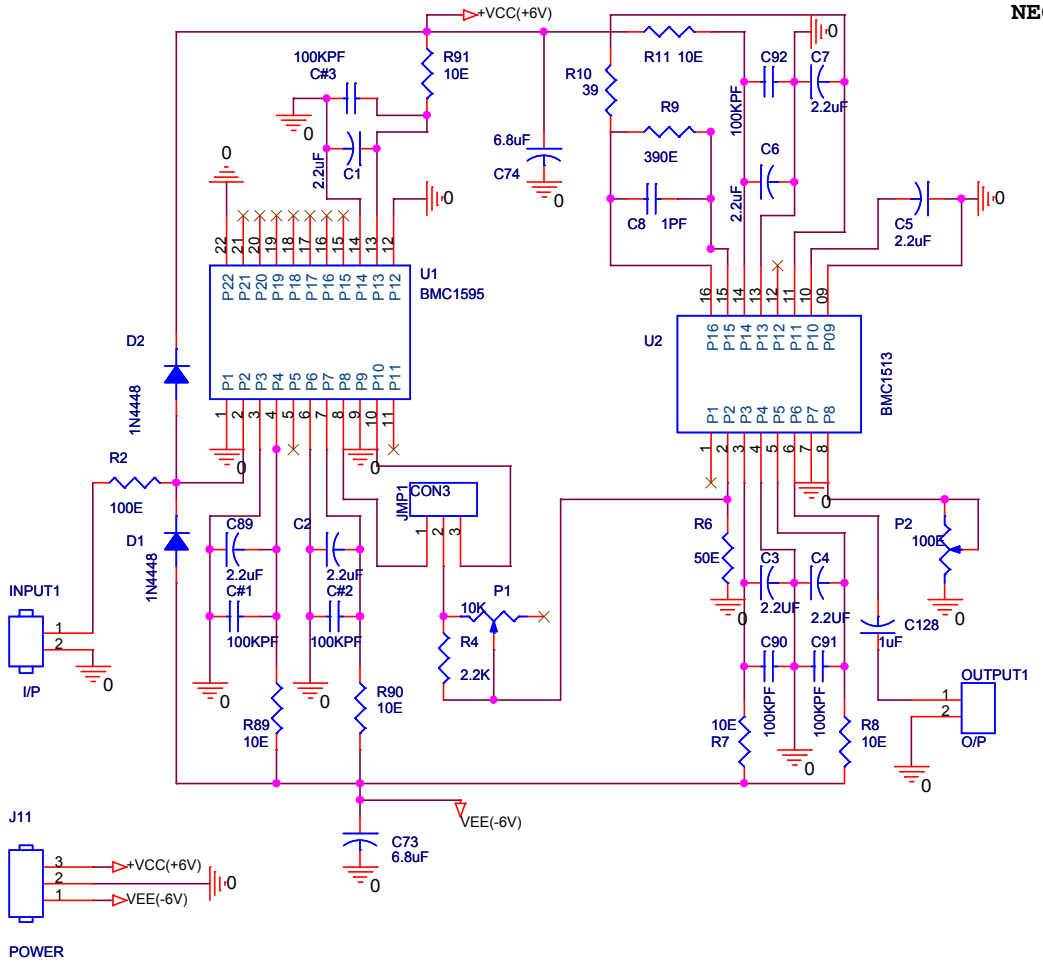


C#1,C#2,C#3 (LABEL AS IN CIRCUIT DIAGRAM )SOLDER ON IC PINS NO LABEL IS PROVIDED ON PCB
FOR +VE INPUT R3 SHOULD BE 50 OHM FOR -VE INPUT R3 SHOULD BE OPEN
SHORT R5 ON PCB
KEEP R1 OPEN LABEL ON PCB
KEEP C9 OPEN LABEL ON PCB
SHORT R2 ON PCB

R2 SHORT ON PCB

R6 IS PLACE NEXT TO R9 ON PCB,NO LABEL IS PROVIDED

C5 IS PLACE NEXT TO C6 NO LABEL IS PROVIDED ON PCB

JMP1= 1-2 FOR -VE INPUT,2-3 FOR +VE INPUT

| | | |
|---|---|---|
| Title | PREAMPLIFIER(for channel no 1) | |
| Size A | Document Number <Doc> | Rev <RevCod |
| Date: Wednesday, November 12, 2008 | Sheet 1 of 1 | |